SOL005 Adapter

- Use Cases
- Feature Descriptions
- Epic and User Story
- SOL005 Adapter Architecture
- SOL005 Operations
- SOL005-based Operation Sequence Flows

Use Cases

- ETSI-Alignment SOL005 Adapter Use Case
  - Package Management for External NFVO
  - Security between the Adapters and External NFVOs
  - Additional operations will be determined

Feature Descriptions

Feature	Description
ETSI Catalog Manger - SOL005 Adapters	ETSI Catalog Manager API support for SOL005 Adapters
SOL005 Adapters - External NFVO	SOL005 Adapter package management support based on SOL005 APIs
Secured communication and authentication and authorization support	Secured communication and authentication and authorization support between SOL005 Adapter and External NFVO • HTTPS protocol • Authentication and Authorization support via AAF

Epic and User Story

Epic	User Story	Description	Frankfurt	JIRA
SOL005 Adapter will support NS/VNF Package Management and NS LCM		SOL005 Adapter will support NS/VNF Package Management and NS LCM	No	SO-2435 - Getting issue details... STATUS
	SOL005 Adapter Package Management for External NFVO by leveraging the ONAP-ETSI Catalog Manager • Access the ONAP-ETSI Catalog Manager to retrieve the NS packages • Access the ONAP-ETSI Catalog Manager to retrieve the VNF packages • Subscribe to the ONAP-ETSI Catalog Manager for package notifications from the Catalog Manager • Terminate the ONAP-ETSI Catalog Manager package notifications • provides APIs to the external NFVO for retrieving the NS packages • Provides APIs to the external NFVO for retrieving the VNF packages	SOL005 Adapter Package Management for External NFVO by leveraging the ONAP-ETSI Catalog Manager	No	SO-2436 - Getting issue details... STATUS

SOL005 Adapter will support SOL005 NS Management		SO supports ETSI SOL005 Alignment of its interfaces with NFVO through SOL005	Yes	SO-1579 - Getting issue details... STATUS
	SOL005 Adapter will support Create NS	SOL005 Adapter will support Create NS	Yes	under SO-1579
	SOL005 Adapter will support Instantiate NS	SOL005 Adapter will support Instantiate NS	Yes	under SO-1579
	SOL005 Adapter will support Terminate NS	SOL005 Adapter will support Terminate NS	Yes	under SO-1579
	SOL005 Adapter will support Delete NS	SOL005 Adapter will support Delete NS	Yes	under SO-1579
SOL005 Adapter will support Communication Security		SOL005 Adapter will support Communication Security based on OAuth2 for APIs and OAuth2 /HTTP Basic Authentication for notification	Yes	SO-2437 - Getting issue details... STATUS
	Secured communication will be supported between SOL005 Adapter and external NFVO	Secured communication between SOL005 Adapter and external NFVO	Yes	SO-2438 - Getting issue details... STATUS
	Authentication and authorization will be supported between SOL005 Adapter and external NFVO	Authentication and authorization will be supported between SOL005 Adapter and external NFVO	Yes	SO-2439 - Getting issue details... STATUS

SOL005 Adapter Architecture

Support ETSI NFV-SOL 005 (Os-Ma-Nfvo ref point) between SO & VF-C/NFVO

SOL005 Operations

The following SOL005 operations will be supported:

- Package Management
- TBD

SOL005-based Operation Sequence Flows
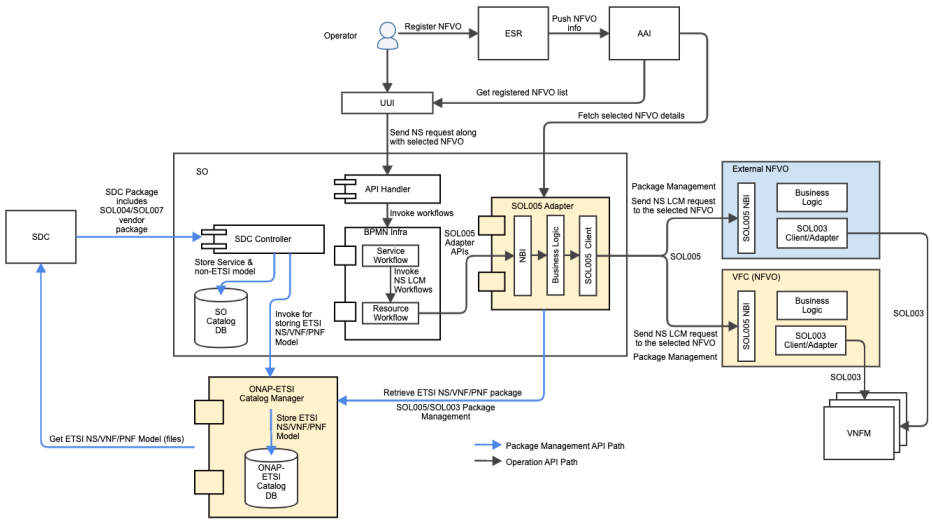
The following diagram depicts SOL005-based operation sequence flows.