Intent-Based Network

This page describes the Intent Based Network.

- Use Case Key Data
- Business Driver
- Scope for G release
- Development Status
- Use Case Diagram
- Use Case Functional Definitions
- Other Impacts
  - Impacted componets
- Testing
  - Current Status
  - End to End flow to be Tested
  - Test Cases and Status
- Guilin Intent-Based Network PoCAn Vertical Industry Use Case
  - Background
  - Scenario Description
  - PoC Demo

Use Case Key Data

TOPIC	LINK
Key REQ Jira	**REQ-329** - Getting issue details... STATUS
Primary Contacts:	Huang ZongHe huangzongh@chinatelecom.cn

Business Driver

This section describes Business Drivers needs.

EXECUTIVE SUMMARY

The Intent-based Network (IBN) is available to bridge the gap between the business department and IT department. It is able to capture the intents of business sensitively, and then reconfigure the end-to-end network according to the intents momentarily. Normally, the operation of underlay network and related systems are involved when opening or reconfiguring a network service. It needs professionals of different roles to perform a series of complex operations, which also takes a long time. The target of IBN is to establish an extensible framework to identify the users' network requirements based on natural language, allocate appropriate resources with the help of preset business knowledge or self-learning intelligent engine, and then convert them into the operations of network equipment and interface automatically, so as to simplify the operations.

In addition, the IBN also includes:

(1) Intent verification function: It is used to verify whether the automatically created network services satisfy the requirements of users;

(2) Intent assurance function: With the help of periodic analyzed business KPI, it checks whether the current network services satisfy the users' requirements, such as QoS. If not, it will reconfigure the resources and networks to satisfy the expectations of users.

BUSINESS IMPACT - The Internet of Everything will be true not soon later. The IBN has great potential in the applications from users and devices in the park or branch office to the data center or cloud. It is able to reconfigure and optimize the network continuously, protect IT and business processes, and provide insight. The IBN simplifies the operation of opening and reconfiguring network service, as well as the operation of monitoring and assuring network quality after opening the service. Operators can use the IBN to capture the intents of business, and then monitor network status and implement strategies in the whole networks. It is able to satisfy the requirements of network business much better.

BUSINESS MARKETS - The Intents can be applied to multiple levels, such as application service levels, security policies, compliance transactions, operational processes and other business requirements. The IBN will be applied to the scenes of the opening and management of various network services. In the first stage, it will be used in the 5G use case to opening and monitoring of network services. Later, it will be integrated into more use cases to simplify the opening and management of services.

FUNDING/FINANCIAL IMPACTS - The IBN is able to respond to the requirements of organizations quickly with little human intervention. with the corresponding reduction of time and energy required for network maintenance, IT professionals can spend more time on innovation to bring practical value to the enterprise. The IBN is able to respond to the requirements of organizations quickly, simplify the manual operation of network opening and management, and reduce operators' OPEX.

ORGANIZATION MGMT, SALES STRATEGIES - There is no additional organizational management or sales strategies for this use case outside of a service providers "normal" ONAP deployment and its attendant organizational resources from a service provider.

Scope for G release

Category	Requirement		Content
Architectural Requirements	A R1	Support 5G slice creation by intent based network	Use intent based network to create 5G slice.
	A R2	Support Intent instance LCM operations	provide functions for intent instance create, terminate, and KPI monitoring operations.
Functional Requirements	F R1	User intent idendify	Use NLP module to parse user inputs, identify user intent and extract the key information.
	F R2	Intent Translation	Translate high-level of abstraction to a more concrete form in order to be validated and processed.
	F R3	Intent Verification	Verify if the intent decision was executed as expected.At present, there is no simulation verification, simple implementation, non-target solution
	F R4	Intent Decision	Decide which, if any, policies shall be executed in response to a request by another managed entity for a set of governance actions.
	F R5	Intent Guarantee	Two-level closed loop and two-level monitoring

Development Status

PROJECT	PTL	User Story / Epic	Requirement
A&AI	James Forsyth		
AAF	Jonathan Gathman		
APPC	Takamune Cho		
CLAMP	Gervais-Martial Ngueko		
CC-SDK	Dan Timoney		
DCAE	Vijay Venkatesh Kumar		
DMaaP	Mandar Sawant		
External API	Matthieu Geerebaert		
MODELING	Hui Deng		
Multi-VIM / Cloud	Bin Yang		
OOF	Shankaranarayanan Puzhavakath Narayanan		
POLICY	Pamela Dragosh		
PORTAL	Manoop Talasila		
SDN-C	Dan Timoney		
SDC	Ofir Sonsino		
SO	Seshu Kumar Mudiganti		
VID	Ittay Stern		
VNFRQTS	Steven Wright		
VNF-SDK	Weitao Gao		
CDS	Yuriy Malakov		

List of PTLs:**Approved Projects**

*Each Requirement should be tracked by its own User Story in JIRA

Use Case Diagram

Use cases define how different users interact with a system under design. Each use case represents an action that may be performed by a user (defined in UML as an Actor with a user persona).

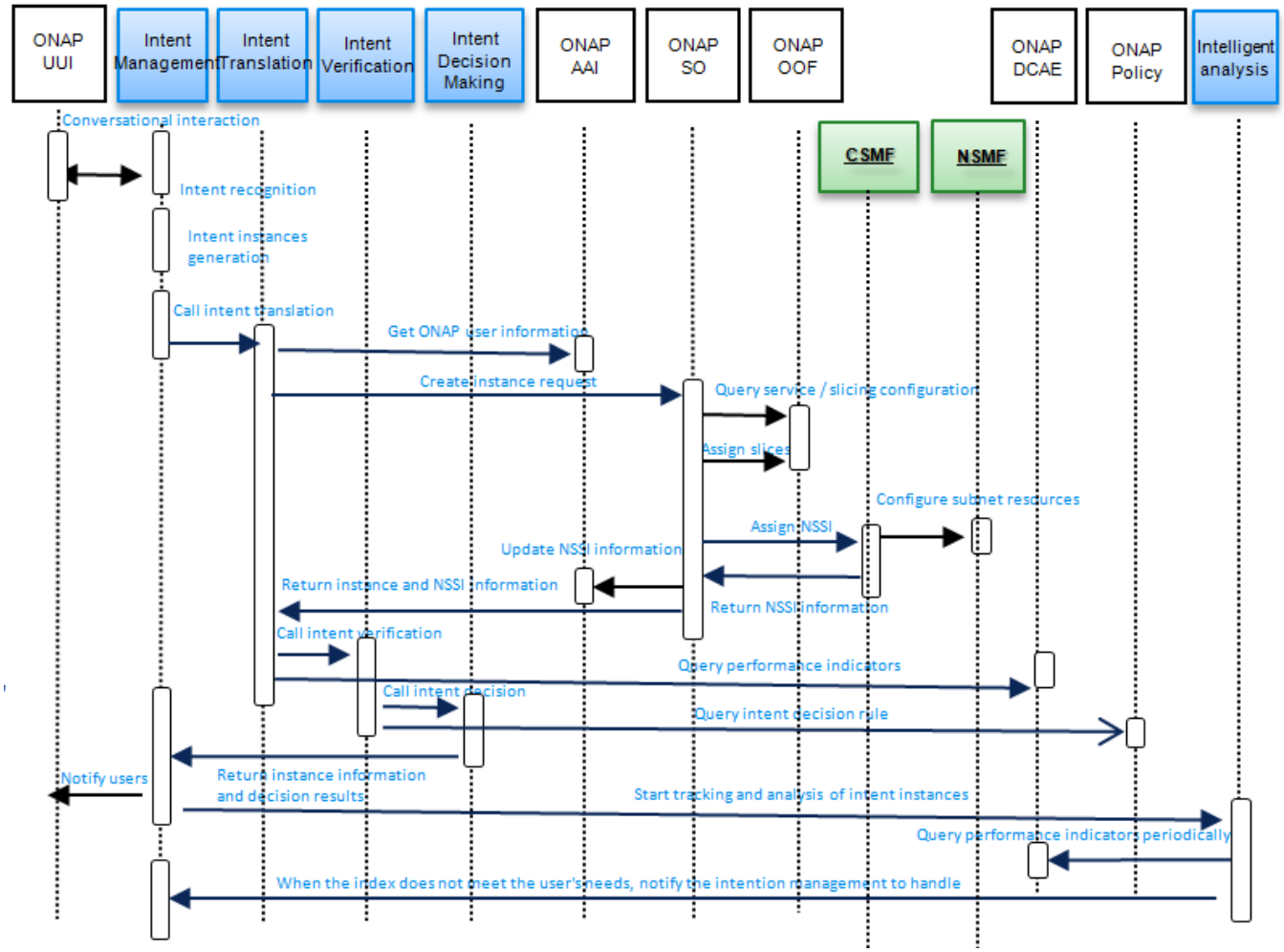

Use Case Functional Definitions

Use Case Title	*Intent-based Network*
Actors (and System Components)	*The list of Actors and System Components that participate in the Use Case*
Description	*Short overview of the Use Case* The Intent-based Network (IBN) is applied to the configuration and optimization of network functions based on the Intents. The current version of IBN is applied to the opening and closed-loop operation of network slices in the 5G use case.
Points of Contact	*Authors and maintainers of the Use Case.* *Use Case Lead, Key Use Case members and code contributors.* *Use Case Lead: Huang ZongHe huangzongh@chinatelecom.cn*
Preconditions	*A list of conditions that are assumed to be true before the Use Case is invoked* *Includes description of Information Consumed*
Triggers / Begins when	*Describes the trigger for beginning the Use Case*

Steps / Flows (success)	*Describes the sequence of steps and interactions that occur during the Use Case (may include: description, data exchanges, functionality, state changes)* *Interaction diagrams may be included or referenced*
Post-conditions	*The expected results of the execution of the Use Case* *Includes description of Information Produced*
Alternate / Exception Paths	*Description of any exceptions or special process that could occur during Use Case*
Related Use Cases	*List of the Use Cases referenced by this Use Case*
Assumptions	*Describes any assumptions that are made for this use case*
Tools / References / Artifacts	*List of any tools or reference material associated with this Use Case as well as any JIRA trace-ability.* List of any associated diagrams or modelling artifacts associated with the Use Case

Other Impacts

Impacted componets

Component name	Impacted detail
AAI	Need to add new object definition in AAI schema, including intent instance, intent solution and intent solution parameter.
UUI	A new page is needed in UUI, which user can input network requirement by human-nature language, then the new page sends the user input to IBN componet and displays the response information to user. This procedure may be repeated multiple times until the conversation is completed and a new intent is formed in IBN component.

Testing

Current Status

1. Testing Blockers
2. High visibility bugs
3. Other issues for testing that should be seen at a summary level
4. Where possible, always include JIRA links

End to End flow to be Tested

This should be a summary level Sequence diagram done in Gliffy

Test Cases and Status

1	There should be a test case for each item in the sequence diagram	NOT YET TESTED
2	create additional requirements as needed for each discreet step	COMPLETE

3	Test cases should cover entire Use Case	PARTIALLY COMPLETE
4	Test Cases should include enough detail for testing team to implement the test	FAILED

Guilin Intent-Based Network PoCAn Vertical Industry Use Case

Background

More and more vertical industries benefit from 5G network in different ways. For example, the warehouse management industry can deploy 5G network and AGVs to achieve fully automatic management and transportation of goods which will greatly improve efficiency and reduce cost.

The output volume of the warehouse management industry varies at different times. It may have a sharp rise in some time (e.g. Online Shopping Festival). At the normal time, warehouse management industry can deactivate some AGVs and scale down the 5G network to save energy. When need to increase output volume, they can activate AGVs and scale up the 5G network dynamically.

Base on the fact that most vertical industries lack experience and ability to manage the 5G network, it requires an automated and smart solution that can help the vertical industry to manage 5G network according to their business needs.

In R7, Intent technology was proposed as a proof-of-concept (REQ-329: https://jira.onap.org/browse/REQ-329).

In this PoC demo, we will present how ONAP with intent technology supports the warehouse management industry to manage their 5G network according to their business intent.

Scenario Description

E-commerce and smart logistics company A has multiple warehouses in a city and its Warehouse-F is responsible for smart warehouses. Two base stations (BS 1&2) are deployed to support the connections of AGVs to 5G Network for Warehouse-F. Each base station was pre-configured with three cells. In BS1 (PNF1), two cells are active and one cell is inactive. In BS2 (PNF2), one cell is active and two cells are inactive. Assuming that each cell can support the connections of 100 AGVs.

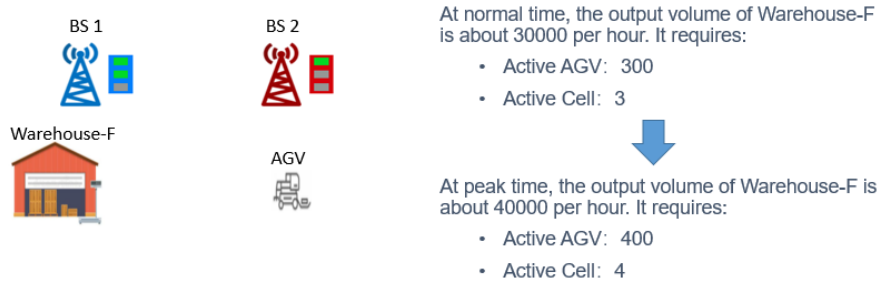

PoC Demo

Business Intent Input & Translation

1.Intent Interface: The vertical industry manager use this interface to input business intent.

2.Decide the number of AGVs to achieve that output volume.

3.Translate into network intent: Provide 400 UE connections in Warehouse-F.

Network Intent Load & Translation

4.Send Network Intent (Intent-CSP) into ONAP Intent Framework (IBN).

5a. ONAP IBN use RESTful API to query A&AI for PNF and Cell info:

5.b ONAP IBN use RESTful request to query the corresponding Cell state and type info

6. Based on the queried info:

- 2 PNFs (PNF1 & PNF2) deployed in the area WareHouse-F;
- 3 Cells are created in each PNF (BS);
- In PNF1, Cell1 and Cell2 are active. In PNF2, Cell4 is active. The rest cells are inactive;
- The type of Cell is “5gdu” and can support 100 UEs (AGV).

Translate the Network Intent: To support 400 UEs, ONAP need one more active Cell.

Invoke the corresponding ONAP operation

7. ONAP IBN sends a RESTful request to CCSDK/CDS to invoke config-modify operation to activate the cell(s).

Intent Implementation Complete

8. CCSDK/CDS uses RESTful executor to generate the 3GPP RESTful modify request and send it to EMS/RAN (Leveraging the NRM CM Req in Frankfurt release).

9. Synchronize the Cell state in CMDB.

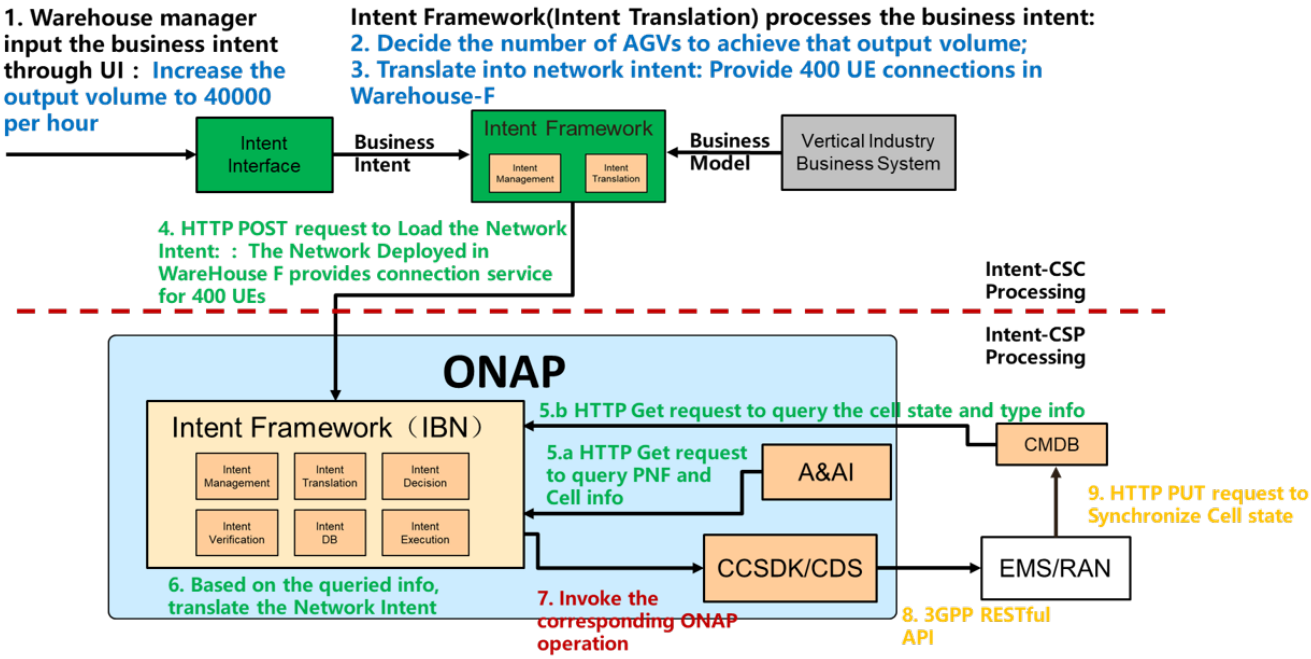

- **I**

n

warehouse manager invokes the interface to input business intent

- **Intent Framework (green):** Outside the ONAP, used to translate the business intent into network intent
- **Vertical Industry Business System (grey):** developed by the vertical industry itself. Provide business models
- **Intent Framework (Orange):** Inside the ONAP, used to translate the network intent into the corresponding operations
- **CMDB (Orange):** Outside the ONAP, used to save the configuration management info.